Introduction

Thank you for purchasing FrSky R9M 2019 telemetry module. As Frsky long range system works in 868MHz, it offers two modes by way of adapting to different flight situations. In order to fully enjoy the benefits of this system, please read the instruction manual carefully and set up the device as described below.

Overview

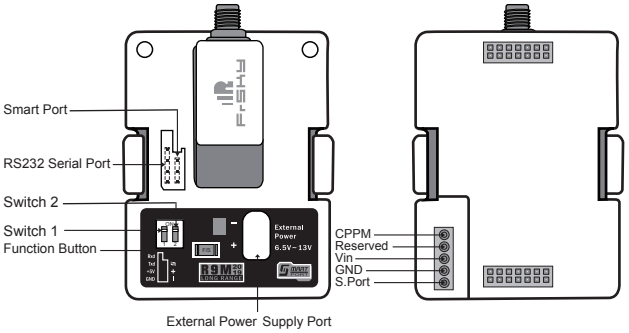

LED Indication		
Green LED	Red LED	Status
ON	Flashing	Waiting To Bind
Flashing	ON	Normal
Flashing	OFF	Range Check

*** If the module is connected to both an external power and a transmitter, it will automatically be powered by the one with higher voltage.**

Zipp9 (868MHz) / Zipp9 (915MHz) Antenna

Recommended 900MHz optional high-gain antenna for achieving higher performance and further range.

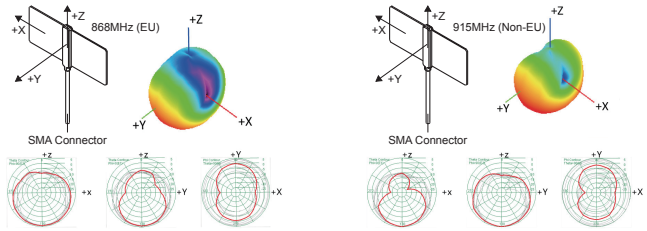

Specifications

- Vin Voltage Range: DC 6.5V~13V
- External Power Supply: DC 6.5V~13V
- Telemetry Interface: Smart Port
- Upgrade Interface: Smart Port
- Modulations: PXX or CPPM (auto-detected)
- RF Operating Frequency: 868MHz

about the output power and operating current :

	EU Version				Range Check
RF Power	**25mW**		**500mW**	**200mW**	**0.001mW**
Operating voltage /current	**7.2V@135mA**	**7.2V@140mA**	**7.2V@400mA**	**7.2V@325mA**	**7.2V@50mA**
Numbers of Channel	**8CH**	**16CH**	**16CH**		**/**
Compatibility	**R9 series**				**/**

Instruction Manual for FrSky R9M 2019 (EU) Module

Smart Port (S. Port) is a signal wire full duplex digital transmission interface developed by FrSky Electronic Co., Ltd. All products enabled with Smart Port (including XJT module, RX8R receiver, new hub-less sensors, new Smart Dashboard, etc), serial port user data and other user input/output devices can be connected without limitations for numbers or sequences at a high transmission speed.

Features

- Long range, low latency and high precision RC system
- Telemetry (25mW) /No Telemetry (500mW/200mW) mode
- Smart Port enabled and support telemetry data transmission

Binding Procedure

Binding is the process of uniquely associating a receiver to a transmitter RF module. A transmitter external RF module can be bound to multiple receivers (not to be used simultaneously). A receiver can only be bound to one RF module.
A: In R9M mode
1. Put the transmitter RF module into binding mode
1.1 For Taranis Series transmitters, turn on the transmitter, go to MENU-MODEL SETUP- PAGE 2, choose External RF Mode R9M EU, and select BIND (OpenTX2.2.1 and its improved versions are strongly recommended).

1.2 For Horus Series transmitters, turn on the transmitter, go to RF SYSTEM, choose External RF (ON), and select BIND.

2. Connect the battery to the receiver while holding the Bind button on the receiver. The RED LED on the receiver will flash, indicating the binding process is completed.
3. Reboot the receiver and switch the RF module back to the normal mode. The flashing of the GREEN LED on the receiver indicates the receiver is receiving commands from the transmitter.

B:In PPM mode
1. Select No Telemetry or Telemetry mode, then power on R9M 2019 while holding its F/S button, Green LED will be on and Red LED will be flashing.
2. Connect the battery to the receiver while holding its Bind button. The Red LED on it will flash, indicating the binding process in completed.
3. Reboot the R9M 2019 and the receiver. The flashing of the GREEN LED on the receiver indicates it is receiving commands from the transmitter.

Note: After binding procedure is completed, resupply the power and check if the receiver is truly communicating with the transmitter.

How to switch Telemetry (25mW) or No Telemetry (500mW/200mW)

-- For Taranis Series transmitters, turn on the transmitter, go to the MENU-MODEL SETUP-PAGE2.
Turn off Internal RF, choose External RF MODE R9M/LBT (EU) and select the BIND to set the mode.

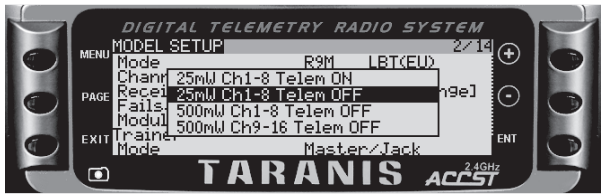

-- For Horus Series transmitters, turn on the transmitter, go to the RF SYSTEM,chooseExternal RF and R9M, then select with Tele or no Tele.

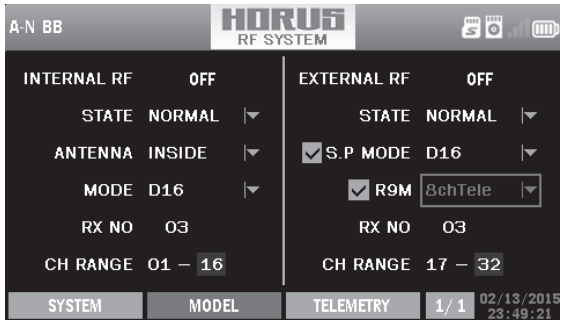

-- For PPM mode: switch the mode through switch1&2 ahead of binding,Press F/S button, blink times of RED& GREEN LED indicating the corresponding power.

Switch 1	Switch 2	Status	LED Blink (Times)
OFF	ON	Telemetry mode (25mW, 8CH output)	Once (Green)
	OFF	Telemetry mode (25mW, 16CH output)	Twice (Green)
ON	ON	No telemetry mode (200mW)	Twice (Green&Red)
	OFF	No telemetry mode (500mW)	Three times (Green&Red)

Note:
1. The 2 modes both conform to the CE standard.
2. The receiver should be rebound after switching the modes between Telemetry (25mW) and No Telemetry (200mW/500mW).

How to enable/disable the S.Port of R9M 2019

-- For Taranis X9D/X9D Plus and Taranis Q X7/X7S, If you want to turn on the S.Port of R9M 2019, turn off the Internal RF.
-- For Horus X12S/X10/X10S, turn on the transmitter. go to the RF SYSTEM, choose the External RF and select the R9M, and select the S.Port or not.

Note: If S.Port is disabled, communication related to S. Port between R9M 2019 and the transmitter will be cut off.

Range Check

A pre-flight range check should be done before each flying session. Reflections from nearby metal fences, concrete buildings or trees can cause loss of signal both during range check and during the flight. Under Range Check Mode, the RF power would decrease and Range distance will reduce to 1/30--1/10 that of Normal Model.
1. Place the model at least 60cm (two feet) above non-metal contaminated ground (e.g on a wooden bench). The receiver antenna should be in vertical position.
2. For Taranis X9D/X9D Plus/X9E and Taranis Q X7/X7S, turn on the transmitter and the receiver, go to: MODEL SETUP/External RF/ Mode R9M/Range.
3. For Horus X12S/X10/X10S, turn on the transmitter and the receiver, go to: MDL/RF SYSTEM/External RF (ON)/ STATE (RANGE).
4. For PPM mode: Shorten TX&RX, power on R9M 2019 again.

Instruction Manual for FrSky R9M 2019 (EU) Module

How to Set Failsafe mode (on the transmitter)

There are 3 failsafe modes: No Pulse, Hold, Custom

- No Pulse: on loss of signal the receiver produces no pulses on any channel. To use this type, select it in the menu and wait 9 seconds for the failsafe to take effect.
- Hold: the model will maintain the last position after the signal is lost. To use this type, select it in the menu and wait 9 seconds for the failsafe to take effect.
- Custom: the customized position of each individual channel. The model will move to the pre-set position after the signal is lost. Move the cursor to “Set” and press ENTER, you will see FAILSAFE SETTING screen below. Move the cursor to the channel you want to set failsafe on, and press ENTER. When moving the crresponding sticks or switches, you will see the channel bar moving. Move the channel bar to the place you want for failsafe and long press ENTER to finish the setting. Wait 9 seconds before the failsafe takes effect.

Note: If failsafe is not set, the model will hold the last position after signal is lost , thus it may fly away or cause injury.

More information please refer to the introduction manual for transmitter.

FrSky is continuously adding features and improvements to our products. To get the most from your product, please check the download section of the FrSky website www.frsky-rc.com for the latest update firmware and manuals

FrSky Electronic Co., Ltd www.frsky-rc.com Contact us : frsky@frsky-rc.com
Add:F-4,Building C, Zhongxiu Technology Park, No.3 Yuanxi Road, Wuxi, 214125, Jiangsu, China Technical Support: sales4tech@gmail.com
01140121